REGO-FIX

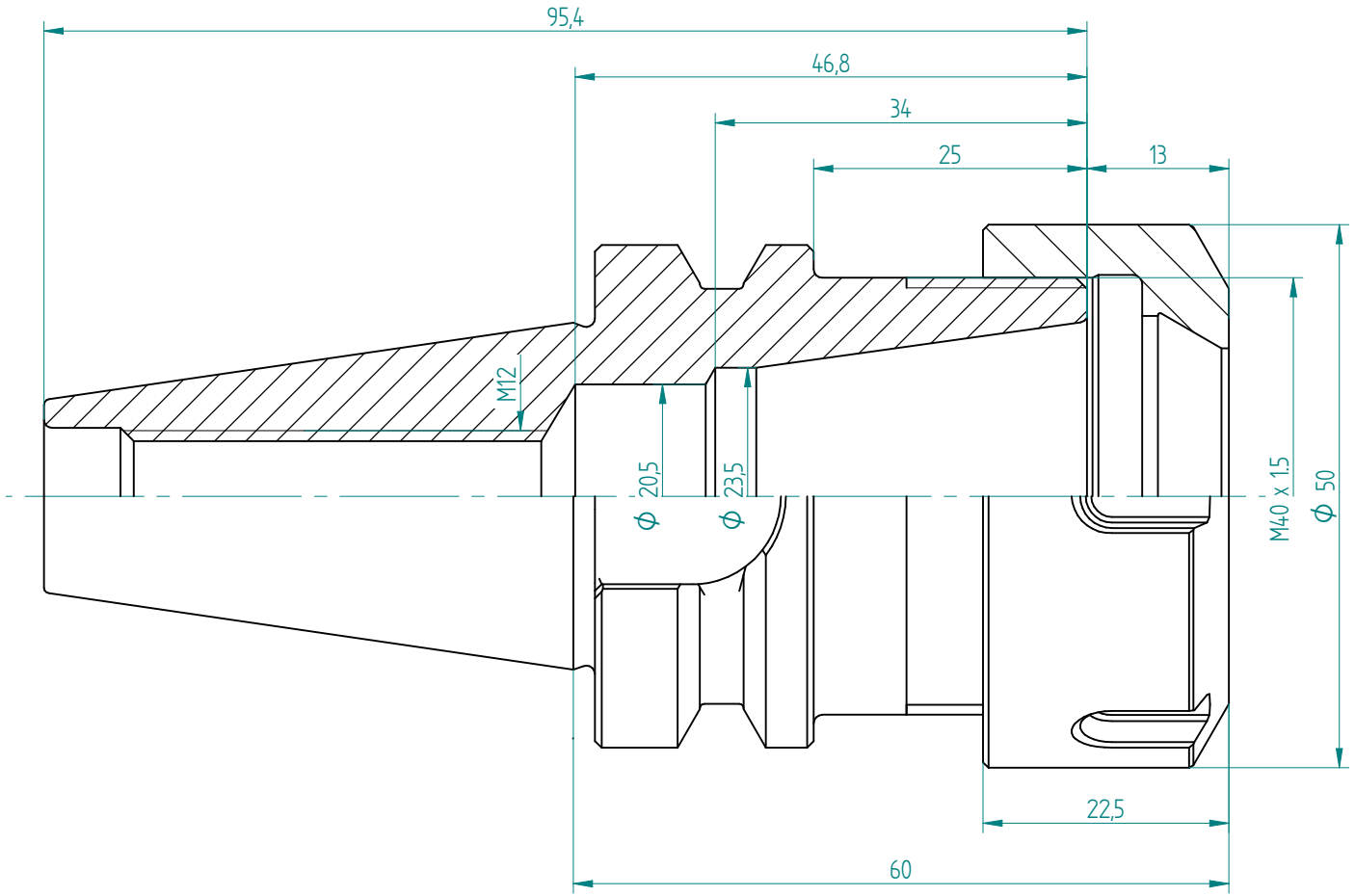

REGO-FIX AG
Obermattweg 60
4456 Tenniken / Switzerland

P +41 61 976 14 66
F +41 61 976 14 14
www.rego-fix.com

This is a non-controlled copy. All information given herein is subject to change without notice

The information given herein has been carefully checked and is believed to be correct. REGO-FIX, however, assumes no responsibility or liability for any errors, inaccuracies or omissions that may appear in this drawing

This document is subject to copyright laws. No part of this document may be reproduced or transmitted in any form or any means, electronic or mechanic, for any purpose, without the express written permission of REGO-FIX

Type : **BT30_ER32x060**
Part No. : **213013220**
Date : 16.09.2015
Scale : 1.5:1